Mounted System Installation Technology Guidance

PT Installation Instruction

1.Fix wood batten or light steel keel on the wall according to the design.

2.Put fiber glass among keels as per design.

3.Put PT-002 and PT-003 on profile PT-001 keel.

4.Install grooved panel one PT-001 keel one by one, and press clips and panel strength.

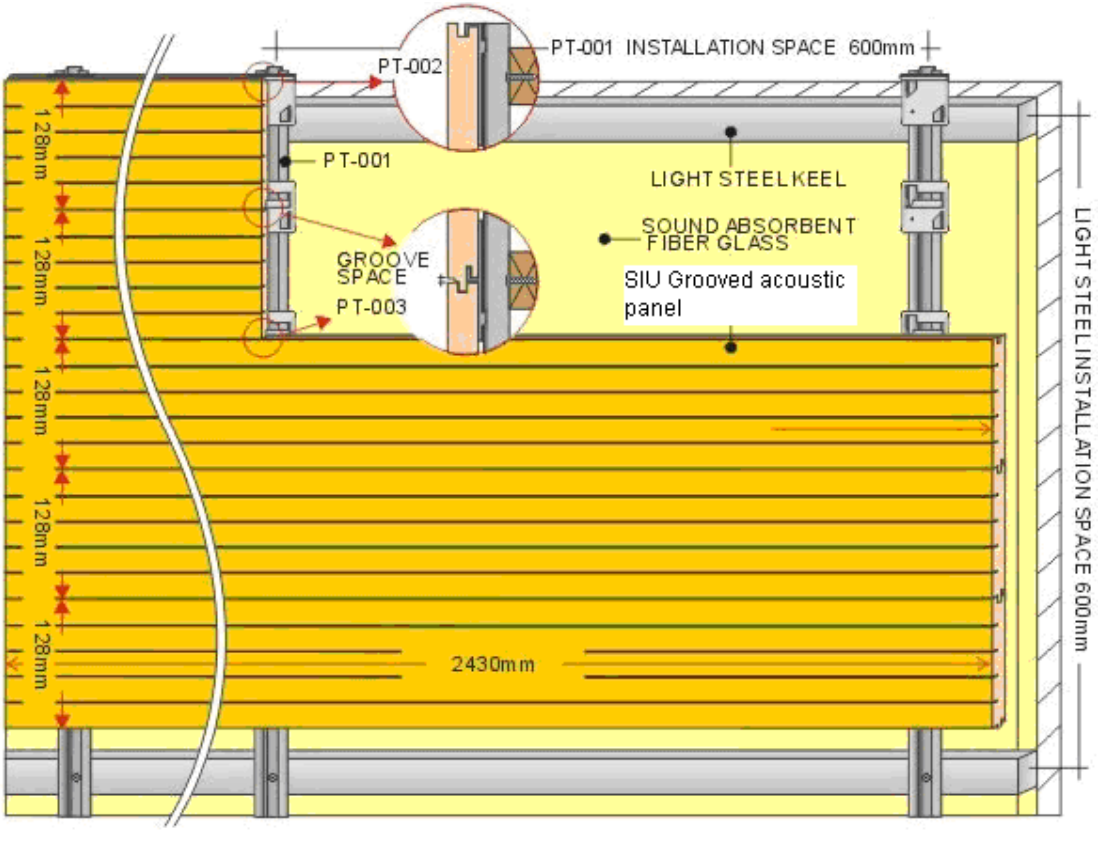

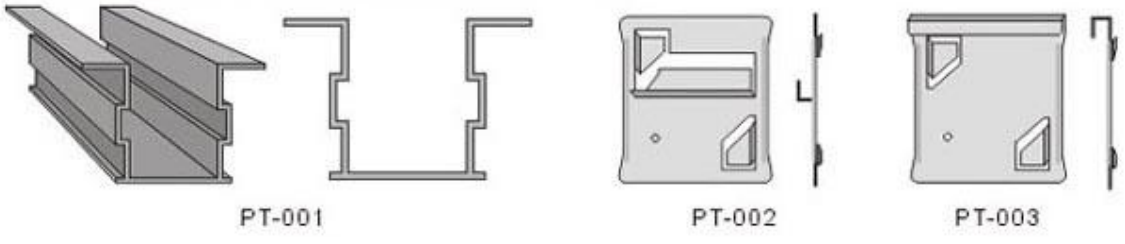

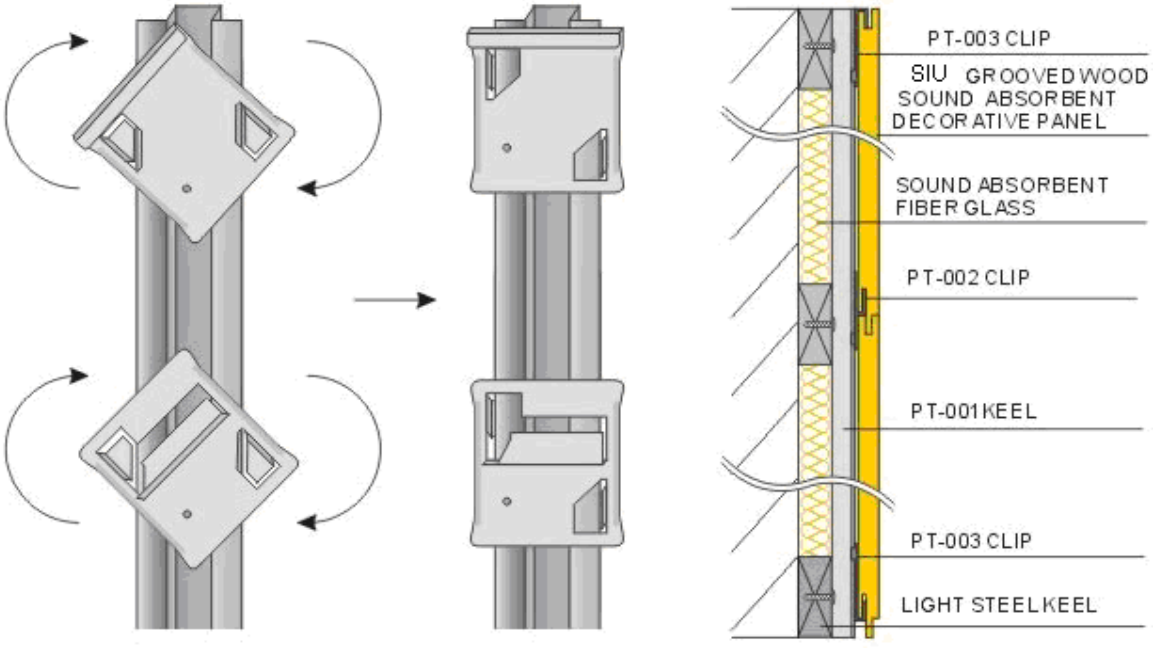
PT-003 CLIP
SIU GROOVED WOOD
SOUND ABSORBENT
DECORATIVE PANEL
SOUND ABSORBENT
FIBER GLASS
PT-002 CLIP
PT-001 KEEL
PT-003 CLIP
LIGHT STEEL KEEL

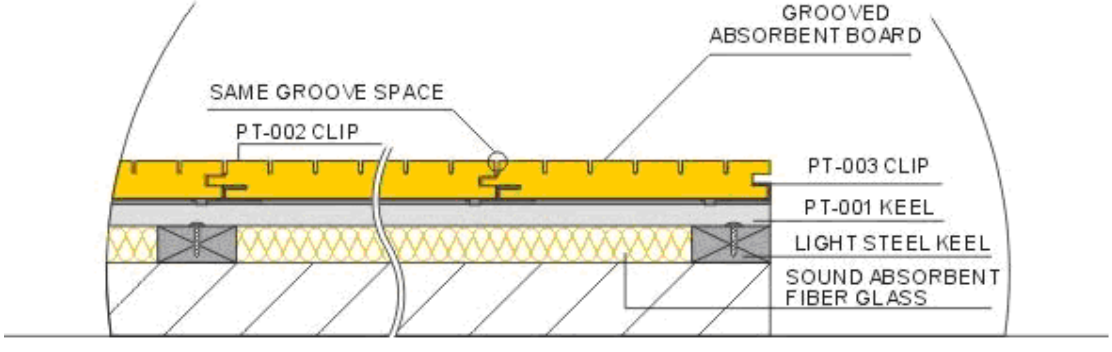
GROOVED
ABSORBENT BOARD
SAME GROOVE SPACE
PT-002 CLIP
PT-003 CLIP
PT-001 KEEL
LIGHT STEEL KEEL
SOUND ABSORBENT
FIBER GLASS